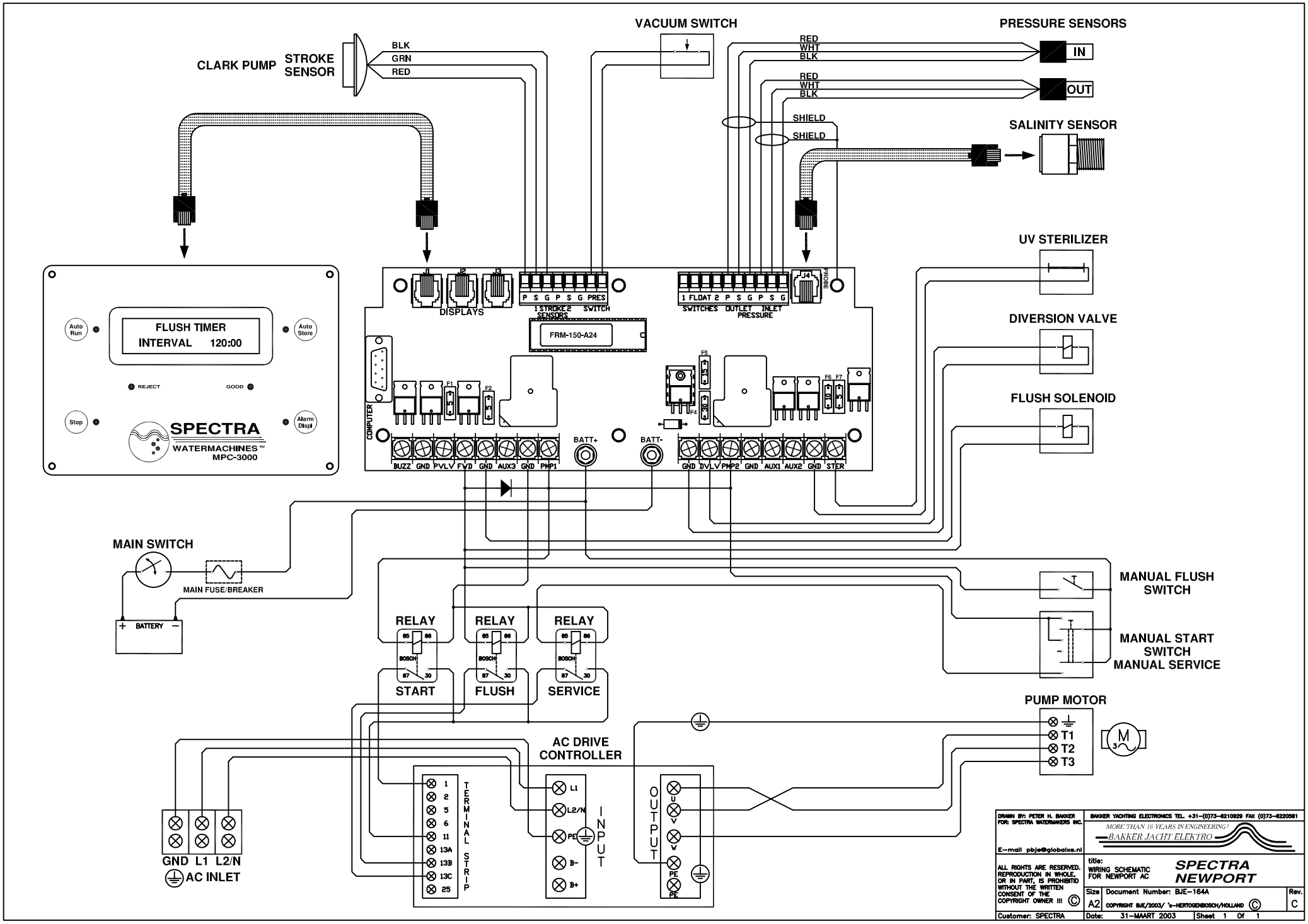
CLARK PUMP
STROKE SENSOR
BLK
GRN
RED
VACUUM SWITCH
PRESSURE SENSORS
RED
WHT
BLK
IN
RED
WHT
BLK
OUT
SHIELD
SHIELD
SALINITY SENSOR
UV STERILIZER
DIVERSION VALVE
FLUSH SOLENOID
FLUSH TIMER
INTERVAL 120:00
Auto Run
Auto Store
REJECT
GOOD
Stop
Alarm Displ
SPECTRA
WATERMACHINES™
MPC-3000
DISPLAYS
J1
J2
J3
P S G P S G PRES
1 STROKE 2 SENSORS
SWITCH
1 FLOAT 2 P S G P S G
SWITCHES OUTLET INLET PRESSURE
J4
PROBE
FRM-150-A24
COMPUTER
F1
F2
F4
F5
F6
F7
BUZZ GND PVLV FVD GND AUX3 GND PMP1
BATT+
BATT-
GND DVLV PMP2 GND AUX1 AUX2 GND STER
MAIN SWITCH
MAIN FUSE/BREAKER
BATTERY
MANUAL FLUSH SWITCH
MANUAL START SWITCH
MANUAL SERVICE
RELAY
RELAY
RELAY
START
FLUSH
SERVICE
PUMP MOTOR
T1
T2
T3
AC DRIVE CONTROLLER
TERMINAL STRIP
1
2
5
6
11
13A
13B
13C
25
INPUT
L1
L2/N
PE
B-
B+
OUTPUT
U
V
W
PE
GND L1 L2/N
AC INLET
DRAWN BY: PETER H. BAKKER
FOR: SPECTRA WATERMAKERS INC.
E-mail pbje@globalxs.nl
BAKKER YACHTING ELECTRONICS TEL. +31-(0)73-6210929 FAX (0)73-6220581
MORE THAN 16 YEARS IN ENGINEERING!
BAKKER JACHT ELEKTRO
ALL RIGHTS ARE RESERVED. REPRODUCTION IN WHOLE, OR IN PART, IS PROHIBITID WITHOUT THE WRITTEN CONSENT OF THE COPYRIGHT OWNER !!! ©
title:
WIRING SCHEMATIC FOR NEWPORT AC
SPECTRA NEWPORT
Size A2
Document Number: BJE-164A
COPYRIGHT BJE/2003/ 's-HERTOGENBOSCH/HOLLAND ©
Rev. C
Customer: SPECTRA
Date: 31-MAART 2003
Sheet 1 Of 1